— With automatic alignment —
**MGFVW200 ( θ =50-60)**

— Without automatic alignment —
**MEVWN200 ( θ =50-60)**
(Economy type)

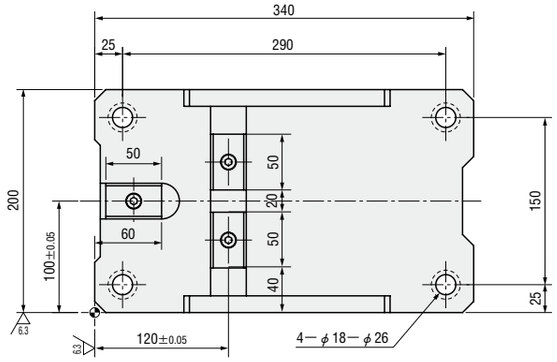


■Rear removal space

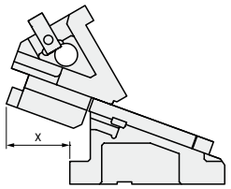


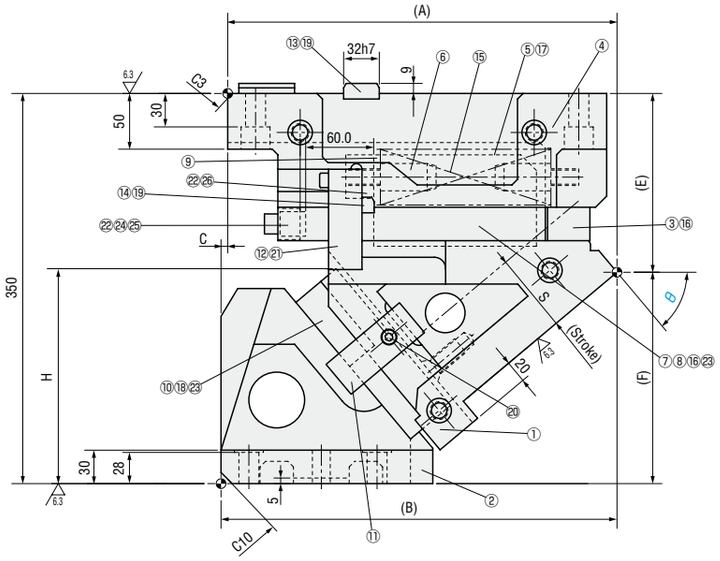


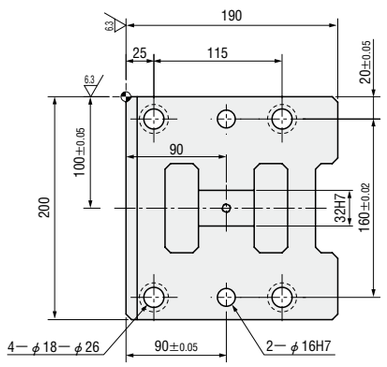


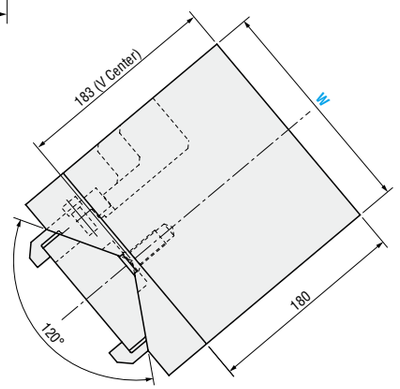


■Components table P.1213

| W | θ | A | B | C | E | F | H | x |
|---|---|---|---|---|---|---|---|---|
| 200 | 50 | 348.77 | 354.77 | 6 | 161.49 | 188.51 | 192.8 | 126 |
| | 60 | 332.75 | 377.75 | 45 | 195.83 | 154.17 | 202.1 | 152 |

| Slide Stroke S | Working force KN (tonf) | | Spring load N (kgf) | | | Total weight kg | Catalog No. | W | θ |
|---|---|---|---|---|---|---|---|---|---|
| | Standard working force | Max. working force | Preload | 5mm before bottom dead center | Max. load | | | | |
| 93.3 | 117.7 (12.0) | 235.4 (24.0) | 817 (83.3) | 4685 (477.8) | 4903 (500.0) | 93.7 | —With automatic alignment— MGFVW | 200 | 50 |
| 120.0 | | | | 4733 (482.6) | | 97.3 | —Without automatic alignment— MEVWN (Economy type) | | 60 |

**Order**

| Catalog No. | W | — | θ |
|---|---|---|---|
| MGFVW | 200 | — | 50 |

**Days to Ship** Quotation

**Price** Quotation

**Alterations**

| Catalog No. | W | — | θ | — | (N・K・FK) |
|---|---|---|---|---|---|
| MGFVW | 200 | — | 50 | — | K |

| Alterations | Code | Spec. |
|---|---|---|
| 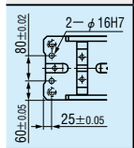 | N | Add dowel hole<br>Add 2 φ 16H7 dowel holes on cam holder |
| 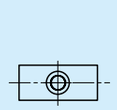 | K | Add locating key<br>(With 1 hexagon socket head cap screw M8×15) 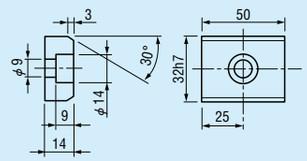 |
| 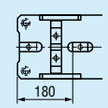 | FK | Move key position<br>Move forward the locating key on cam holder. |