Cam positive return followers RoHS

CKF

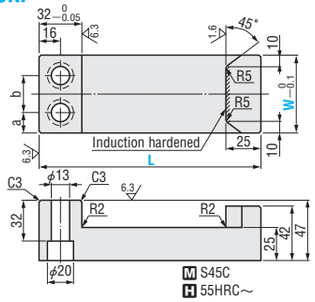

a	b	Catalog No.	W	L
15	30	CKF	60	171
				191
20	40		80	171
				191

a	b	c	d	d1	e	T	Catalog No.	W	L
15	30	11	11	17.5	18	30	CKB CKBK	25	60
		16	13	20	23	38		32	60
20	40								80

Catalog No.	(W)	(L)
KMKW KMKS KMKK	48	60

ℓ	Catalog No.	(W)	L
52.5	CKFU	60	100
72.5			120

Cam positive return blocks RoHS

CKB (Copper alloy・Special solid lubricant (embedded) type)
CKBK (Copper alloy type)

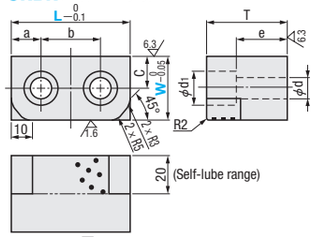

Cam positive return followers

KMKW (Copper alloy type)
KMKS (SS400 type)
KMKK (S45C type)

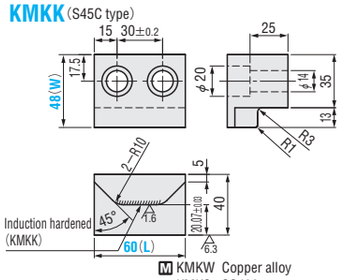

Cam positive return followers

CKFU

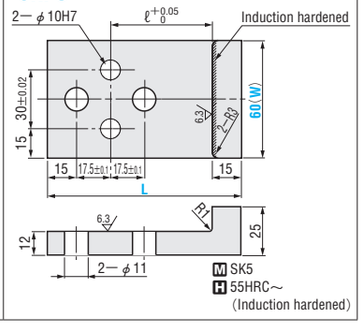

Order

Catalog No.	W	—	L
CKF	60	—	171
CKB	25	—	60

Catalog No.	(W)	—	L
CKFU	60	—	120

Days to Ship: Quotation

Price: Quotation

Example

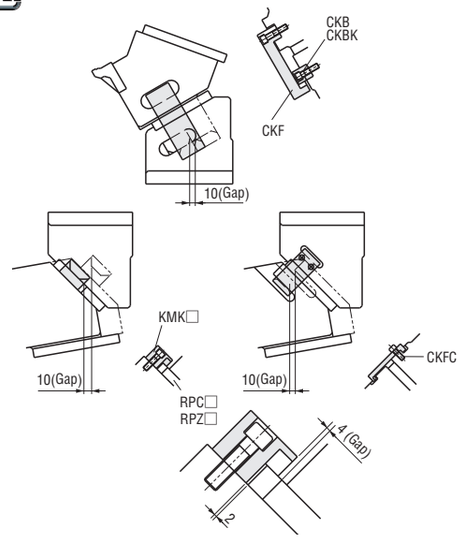

Cam positive return followers

CKFV

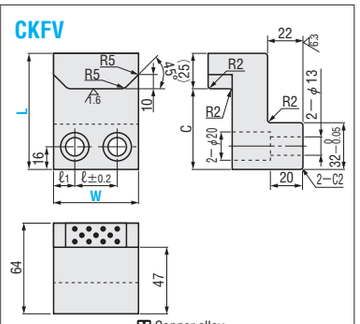

ℓ	ℓ1	C	Catalog No.	W	L
30	15	57	CKFV	60	82
		77			102
		87			112
40	20	57		80	82
		77			102
		87			112

ℓ	ℓ1	Catalog No.	W	L
30	15	CKFW CKFX	60	85
40	20		80	

ℓ1	T	t	d	No. of screw holes	Catalog No.	W	L
7.5	16	8	10	1	CKFC	30	55
							75
10	18	10	12	2		50	65
							85
							105

ℓ	Catalog No.	W	L
32.4	CKFB	30	67.5
42.4		35	77.5

Cam positive return followers

CKFW (Copper alloy type)
CKFX (Steel type)

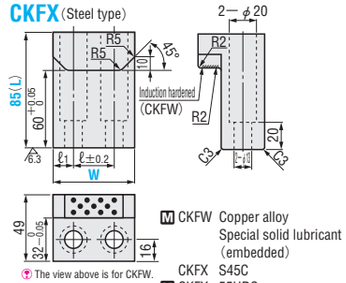

Order

Catalog No.	W	—	L
CKFV	60	—	82
CKFW	80	—	85
CKFC	50	—	85
CKFB	30	—	67.5

Days to Ship: Quotation

Price: Quotation

Alterations

Catalog No.	W	—	L	—	(N)
CKFW	60	—	85	—	N

Code	Spec.
N	Dowel hole is machined on CKFW and CKFX.

■Dowel hole size

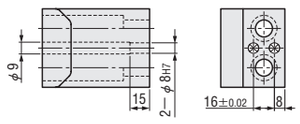

Cam positive return followers

CKFC

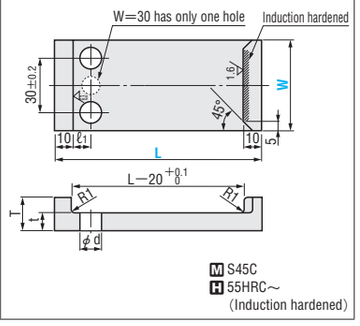

Cam positive return followers

CKFB

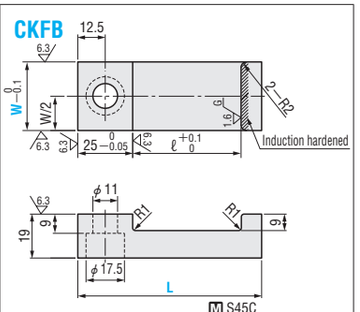

Example

●When mounted on the side of cam slider

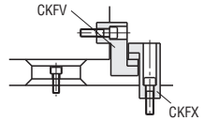
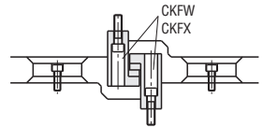
●When mounted on the bottom of cam slider